Educational research fields

Graduate School of Science and Engineering,
National Defense Academy
Mechanical Engineering
Dynamics System

Mechanical Dynamics

Professor Dr. Hideya Yamaguchi
Associate Professor Dr. Hidehisa Yoshida

In order to operate the machine along the purpose and to achieve the high performance, it is indispensable to clarify the kinetic and dynamic characteristics and cope with the vibration problem. Subject of our research covers areas from the basic dynamic problem on kinematics, vibration and mechatronics, to the application research on mechanical design, control system design, vehicle design (automobile & railway etc.,) and human interface design.

Update: June 6, 2012

Linear Friction Damper and Passive Vibration Isolation Sys.

Study on passive vibration isolation system using linear friction damper

In order to overcome drawbacks of the ordinary friction damper, we propose a new type of friction damper. This is achieved by use of an inclined lever, which contacts the cylindrical block by means of a rotational spring, causing the normal and frictional forces at the contact surface to vary according to the displacement of the cylindrical block.

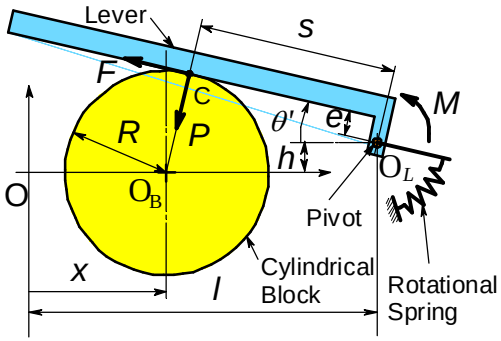

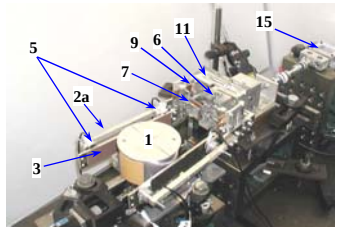

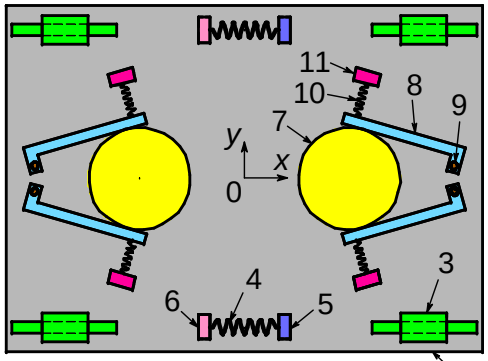

(Top view without table)

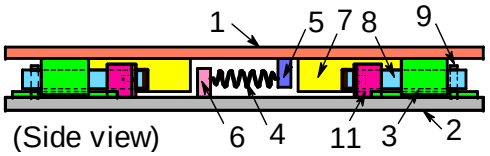

(Side view)

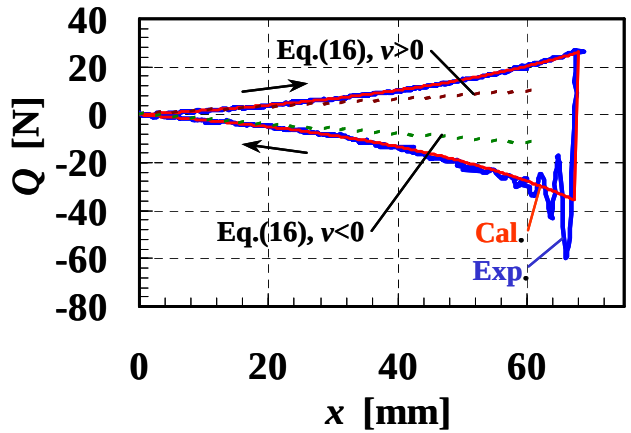

The force Q increases when the displacement x increases. At a moment that x starts to decrease, Q inverts its sign and then asymptotically approach zero.

Hideya YAMAGUCHI, Hidehisa YOSHIDA, Linear Friction Damper Consisted of Cylindrical Friction Block and Inclined Lever (Investigation of Sprag-Slip), *TRANSACTIONS OF THE JAPAN SOCIETY OF MECHANICAL ENGINEERS Series C*, Vol.77, No.776, (2011), Pp.1213-1222

Update: June 6, 2012

Resonat-type Optical Scanner using MEMS Technology

Study on Resonat-type optical scanner

Although a polygon mirror is used in the laser scanning exposure part in a laser beam printer, a new system is examined for the further improvement in performance. In order to improve the performance in the speed, miniaturization, and low-power-consumption of an optical scanner. it is proposed about the new resonat-type optical scanner using MEMS(Micro Electro Mechanical System) technology, and is investigating about the feasibility.

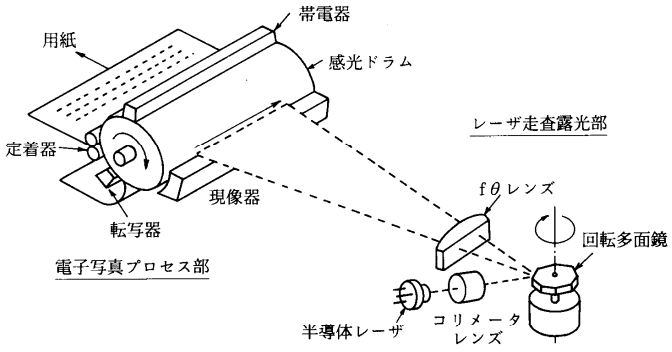

Laser beam printer
(Conventional type using polygon mirror)

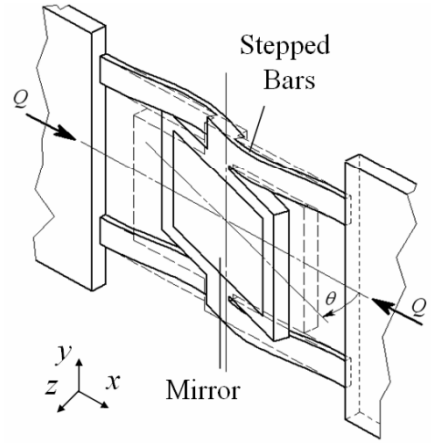

Proposed resonated type light scanner

Seiichi KAWASAKI, Hideya YAMAGUCHI, Excitation by Axial Force of MEMS Resonant-type Optical Scanner Supported with Stepped Bars, *JSME Dynamics & Design Conference 2007*, (2007), "703"

Update: June 6, 2012

Advanced Driver Assistance System for Safety & Security

Advanced driver assistance micro universal vehicle

Automobile safety in small and micro-sized vehicles, including electric vehicles, is a concern, because their smaller size makes collision-related impacts potentially more damaging to the vehicle and its occupants. This study analyzes a collision avoidance technology designed to improve the safety of small or micro-sized vehicles using the active safety technology.

Advanced driver assistance micro UV

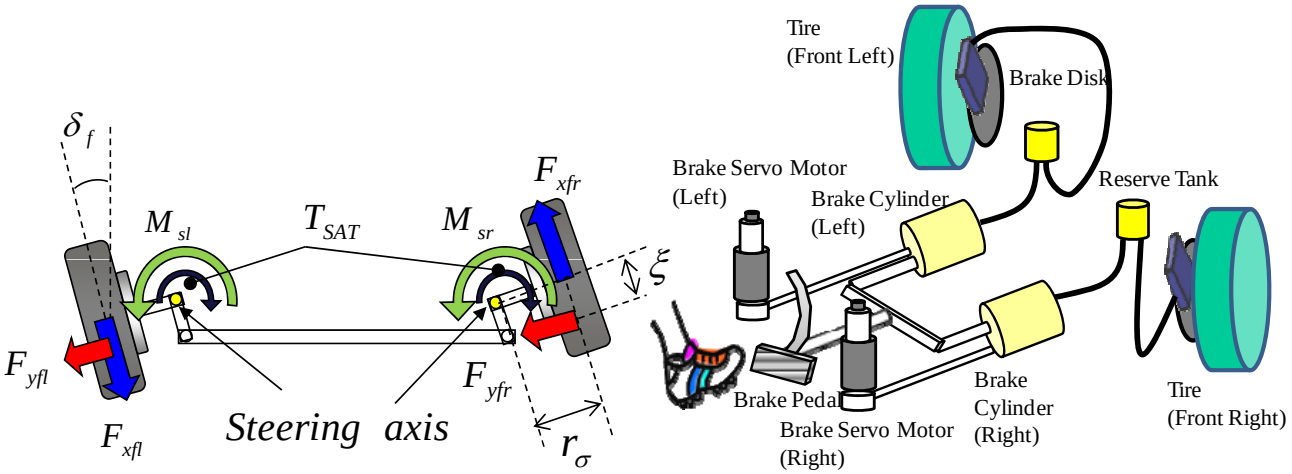

(*a*) Steering system (*b*) Traction & braking system

Control devise of Advanced driver assistance micro UV

Sadakatsu Arai, Hidehisa Yoshida, Hideya Yamaguchi, Automatic Obstacle Avoidance System by Steered Vehicle using Active Wheels Torque Control of Traction and Braking, Proceedings of *First International Symposium on Future Active Safety Technology toward zero-traffic-accident* (*FAST-zero'11*), Tokyo, JAPAN, TS3-8-3-4 (20117398), September 5-9,2011

Advanced Driver Assistance System for Safety & Security

Study on driver assistance system

In a steering system, the effect of steering assistance system, such as lane-keeping and automatic collision avoidance, is expected. In these system, that interference arises between assistance system and driver operation must avoid. Then, the proposal of a steering assistance system, effect evaluation of assistance control, and evaluation by the subject experiment by Driving Simulator which checks that a negative effect does not arise are considered.

Measurement of surface myoelectricity

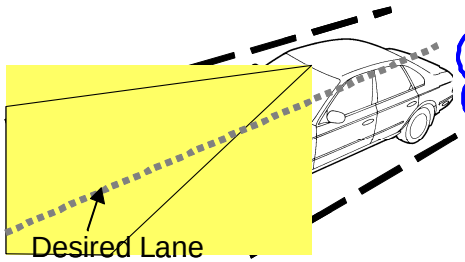

Lane departure prevention support

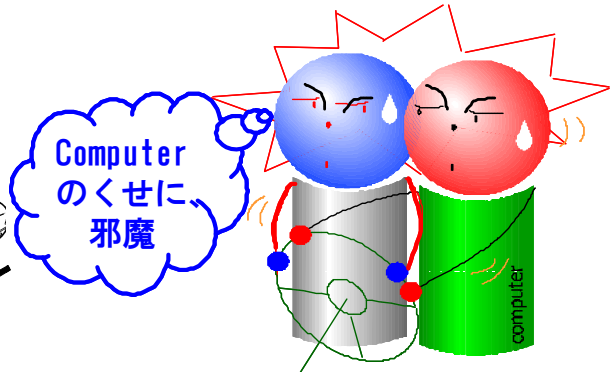

Not desirable concept of steering cooperation

Driving Simulator (DS) for research work

Hidehisa YOSHIDA, Satoshi TAKAMURA, Masao NAGAI, Steering Torque Design of Attitude Control Assistance System for Lane-Keeping Situation, Proceedings of *AVEC'08* (*9th International Symposium on Advanced Vehicle Control*), (2008), pp.40-45

Update: June 6, 2012

Motion & Vibration Control for comfort & safety/security

Car body tilting system using variable link mechanism

In order to feel comfortable after securing safety in a vehicle, low vibration acceleration level which felt unpleasant, realizes reducing feeling of incongruity. Then, the new vehicle tilting control using a variable link mechanism which reduces simultaneously both acceleration which a passenger feels, and wheel load imbalance which is an index of the stability of vehicle is proposed, and verified by the experiment.

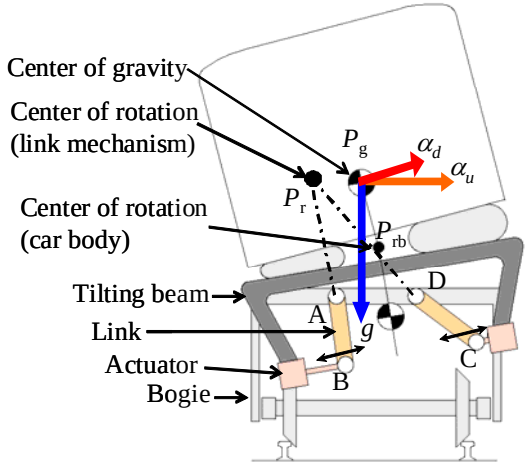

Tilting system using variable link mechanism

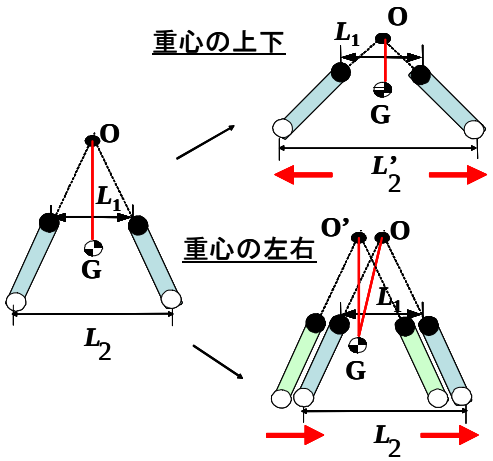

Center-of-gravity movement by variable link mechanism

Hidehisa YOSHIDA, Masao NAGAI, Syunsuke SIOMI, Takeshi SUEKI, Study on Car body tilting system using variable link mechanism (2nd Rep. Tilting control design based on strategy of perfect tilting condition), *TRANSACTIONS OF THE JAPAN SOCIETY OF MECHANICAL ENGINEERS Series C*, Vol.75, No.753, (2009), pp.1775-1782

Update: June 6, 2012